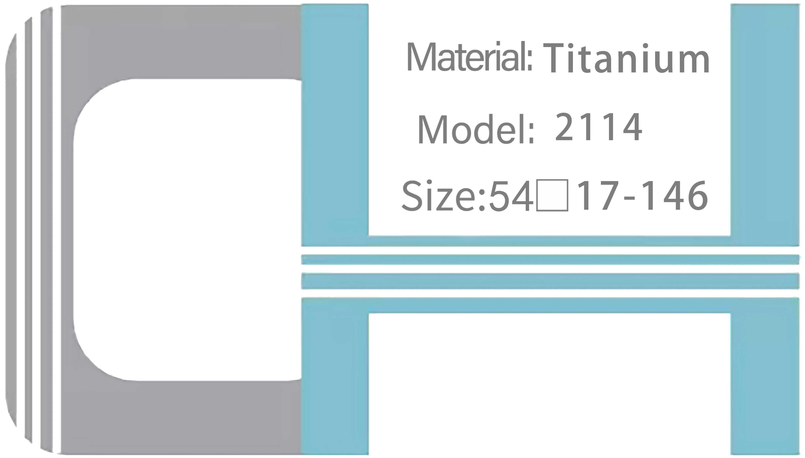

COLOR DISPLAY

C1:Black

C2:Gold

C3:Gun

C4:Silver

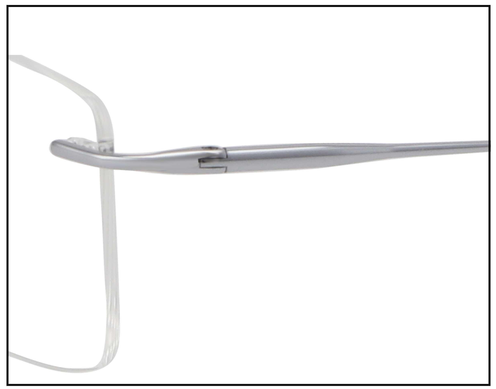

TWO-COLOR DESIGN

TWO-IN-ONE HINGE

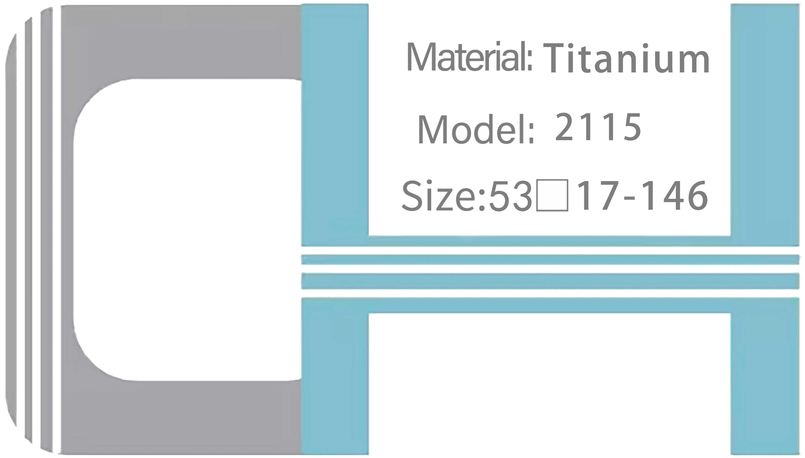

COLOR DISPLAY

C1:Black

C2:Gold

C3:Gun

C4:Silver

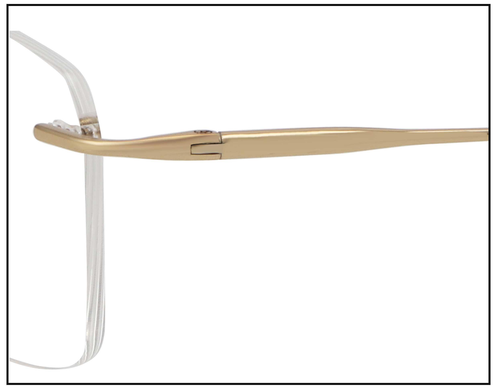

TWO-COLOR DESIGN

TWO-IN-ONE HINGE

Material: Titanium

Model: 2116

Size:54□17-146

COLOR DISPLAY

C1:Black

C2:Gold

C3:Gun

C4:Silver

TWO-COLOR DESIGN

TWO-IN-ONE HINGE

Material: Titanium

Model: 2117

Size:54□17-146

COLOR DISPLAY

C1:Black

C2:Gold

C3:Gun

C4:Silver

TWO-COLOR DESIGN

TWO-IN-ONE HINGE

Material: Titanium

Model: 2118

Size:54□17-146

COLOR DISPLAY

C1:Black

C2:Gold

C3:Gun

C4:Silver

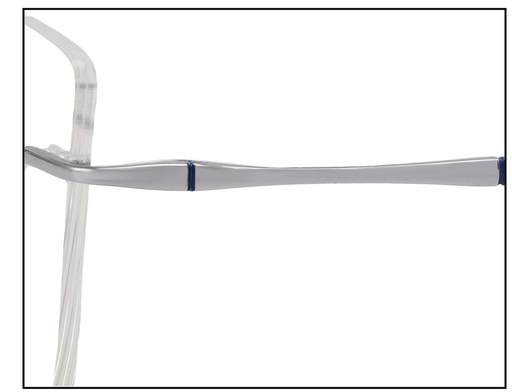

TWO-COLOR DESIGN

TWO-IN-ONE HINGE

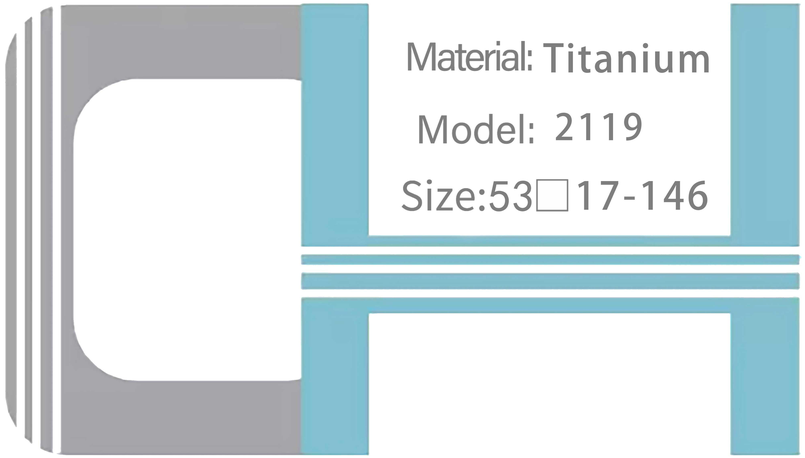

COLOR DISPLAY

C1:Black

C2:Gold

C3:Gun

C4:Silver

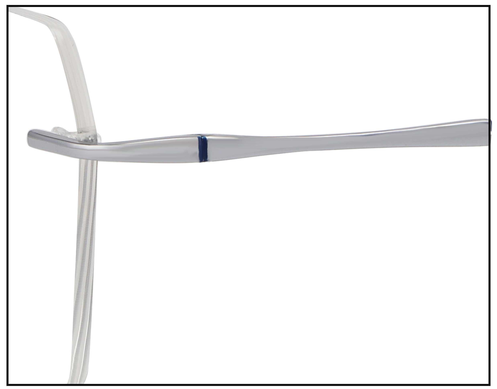

TWO-COLOR DESIGN

TWO-IN-ONE HINGE